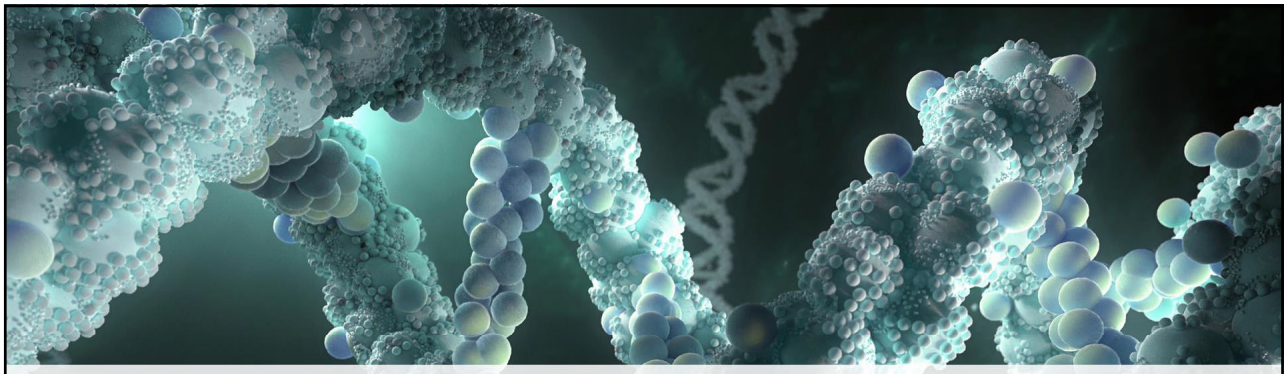

ThermoFisher SCIENTIFIC

The importance of flexibility of multivariate PAT techniques

Eric Jayjock, PhD
June 19th, 2019
Analytics Solutions Conference
Minneapolis, MN

Patheon
part of Thermo Fisher Scientific

The world leader in serving science

Today's Talk

Topic
My brief history with continuous manufacturing
The role and challenge of Spectroscopic PAT in CM
Business Requirements for a Data Management System
Final Words

ThermoFisher SCIENTIFIC

What my chemical engineering education taught me about CM

PennState College of Engineering | CHEMICAL ENGINEERING

RUTGERS School of Engineering

2012 Project:

- Build a continuous direct compression process at Rutgers
- Demonstrate Proof of Concept on a Janssen product
- Develop an understanding of the broader capabilities of the technology

3

ThermoFisher SCIENTIFIC

What my chemical engineering education taught me about CM

Rendering of the Rutgers Prototype DC line (Circa 2012)

Loss in weight Feeding

Continuous Blending

Compression (Encapsulation)

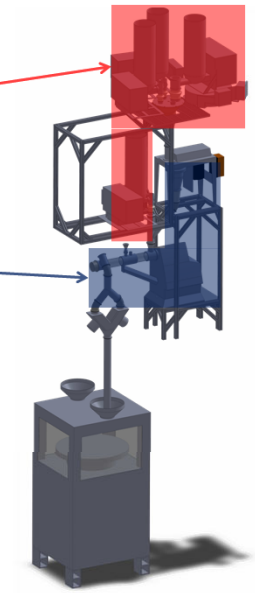

4

ThermoFisher SCIENTIFIC

What my chemical engineering education taught me about CM

What is Loss In Weight Feeding

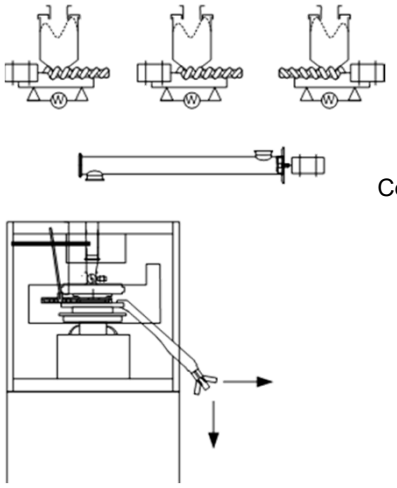

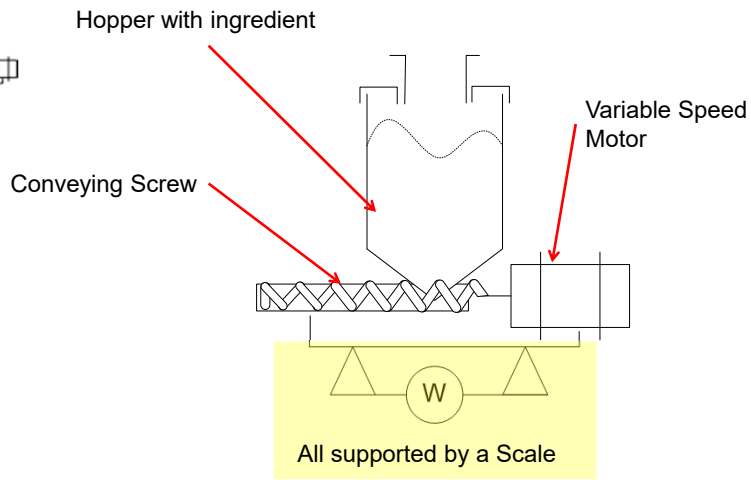

5

ThermoFisher SCIENTIFIC

What my chemical engineering education taught me about CM

Why Loss In Weight Feeding

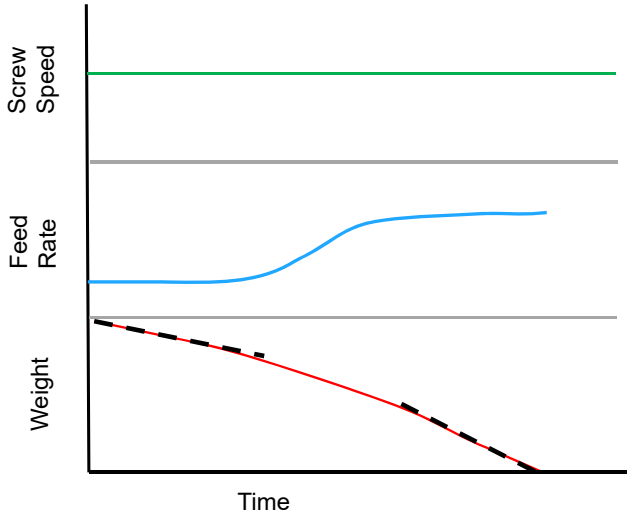

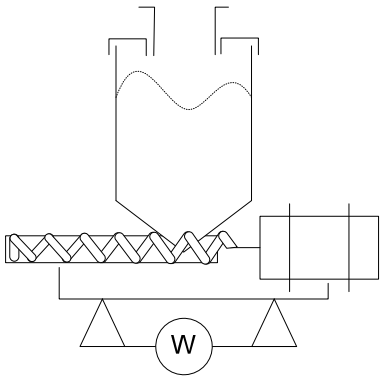

6

ThermoFisher SCIENTIFIC

What my chemical engineering education taught me about CM

How it ties to product quality

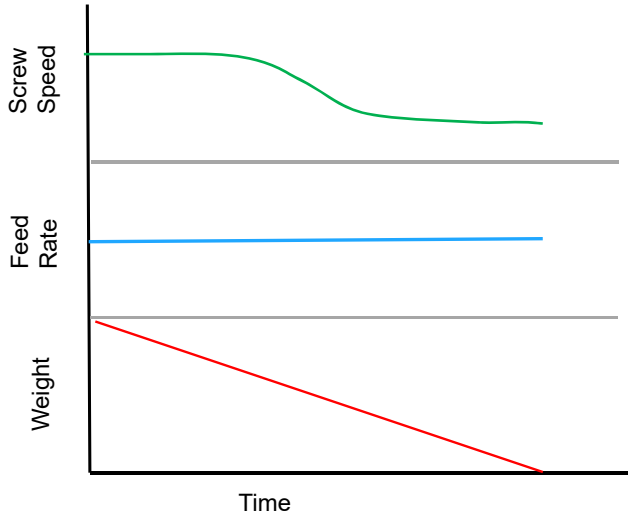

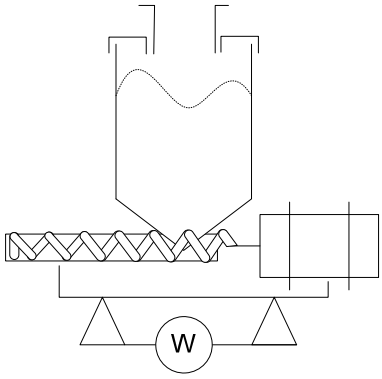

ThermoFisher SCIENTIFIC

What my chemical engineering education taught me about CM

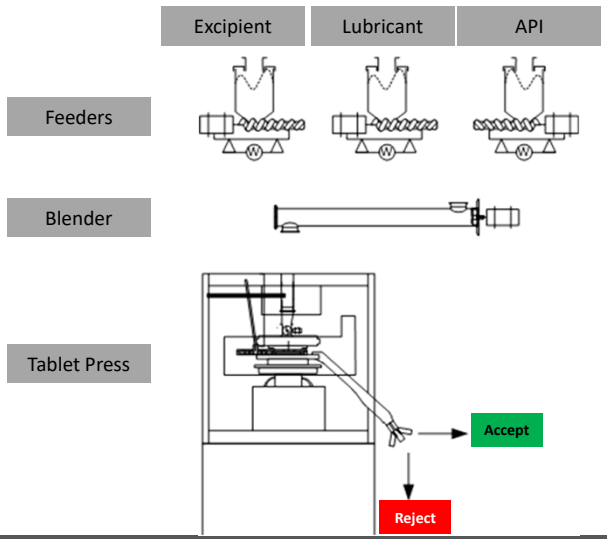

Mass movement through even complex systems can be modeled using fundamental mass balances.

When properly developed these models can predict the concentration of the product stream based on the rate at which each component is being feed in real time.

ThermoFisher SCIENTIFIC

What industry has taught me about continuous manufacturing

Hired by Janssen in Puerto Rico to support development of a DC line

- New product volumes have been decreasing over the past years
- Branded Products typically have a 5-10 years of production before volumes tapper off
- The majority of products produced at any one plant can be considered low volume
- Continuous manufacturing lines have many small parts, which make cleaning a challenge

The Continuous Manufacturing Challenge:

Typical product volumes would eliminate the potential for product dedicated processes

ThermoFisher SCIENTIFIC

What industry has taught me about continuous manufacturing

Each Product is unique

- Target Dosage from mg to grams
- Different numbers of components
- Powders variable properties (e.g. flowability and density)
- Variable Risk Profile based on chemistry of active ingredient

ThermoFisher SCIENTIFIC

What industry has taught me about continuous manufacturing

The large capacity of the continuous manufacturing line makes the idea of a process per product impractical

The diverse nature of OSD products makes designing a single process which is capable many products difficult

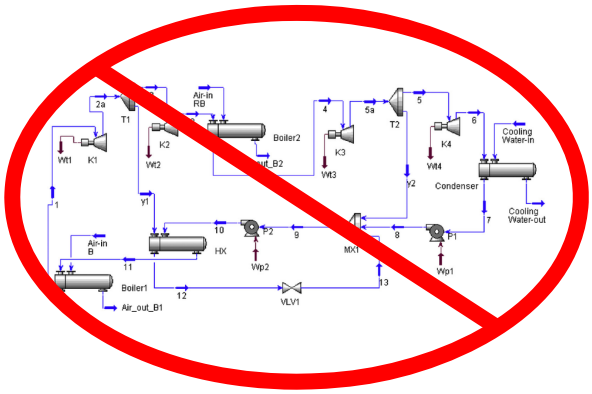

ThermoFisher SCIENTIFIC

What industry has taught me about continuous manufacturing

Proof of concept process took ~1 year to demonstrate in a University Environment

The first tech transferred product took more than 4 years to finish in industry

Why?

ThermoFisher SCIENTIFIC

What industry has taught me about continuous manufacturing

Summary of the potential and the challenges of continuous manufacturing

Potential:

- Most products can be developed in less time, with less material
- Process are capable of real-time control and continuous process monitoring to continuously improve product knowledge

Challenges:

- A process dedicated to a product would be cost prohibitive
- CM is still young, and will need more innovation!
- There is a natural tension between innovation and the GMP environment

ThermoFisher SCIENTIFIC

A side note: Definition of PAT

The Agency considers PAT to be a system for designing, analyzing, and controlling manufacturing through timely measurements (i.e., during processing) of critical quality and performance attributes of raw and in-process materials and processes, with the goal of ensuring final product quality**. It is important to note that the term analytical in PAT is viewed broadly to include chemical, physical, microbiological, mathematical, and risk analysis conducted in an integrated manner.**

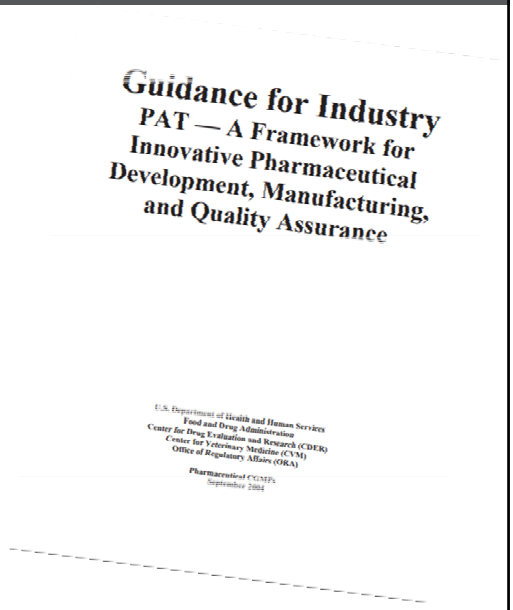
Guidance for Industry
PAT — A Framework for Innovative Pharmaceutical Development, Manufacturing, and Quality Assurance

U.S. Department of Health and Human Services
Food and Drug Administration
Center for Drug Evaluation and Research (CDER)
Center for Veterinary Medicine (CVM)
Office of Regulatory Affairs (ORA)

Pharmaceutical CGMPs
September 2004

ThermoFisher SCIENTIFIC

A side note: Definition of PAT

For this talk

- Focus on Spectroscopic PAT
- Other methods of process monitoring, such as models which use feeder information are PAT

15

ThermoFisher SCIENTIFIC

The role of Spectroscopic PAT in CM

- The feeders are constantly self adjusting to insure the concentration of all the components of the product stream

What does spectroscopic PAT Contribute?

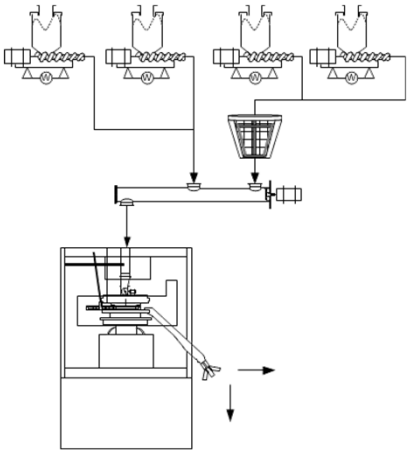

16

ThermoFisher SCIENTIFIC

The role of Spectroscopic PAT in CM

An independent measurement of the chemical properties of the stream (e.g. concentration)

1. Ability to monitor mixing dynamics in real time – a critical tool for developing products/processes
2. Ability to detect upset conditions within the process, such as API sticking and release
3. Could potentially be used in lieu of lab data for release

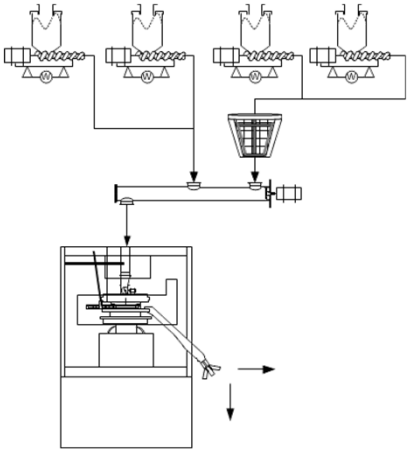

17

ThermoFisher SCIENTIFIC

The role of Spectroscopic PAT in CM

An independent measurement of the chemical properties of the stream (e.g. concentration)

1. Ability to monitor mixing dynamics in real time – a critical tool for developing products/processes
2. Ability to detect upset conditions within the process, such as API sticking and release
3. Could potentially be used in lieu of lab data for release

Critical in development, but not necessary in manufacturing when the process is always running to maintain a target

Important risk screening tool when studying how materials interact with the process, may not be needed if process can be demonstrated to run without such issues (validation).

The economic value of this is yet to be determined. If resources needed to develop and maintain spectroscopic methods are high, it may be more viable to continue standard release testing practices

18

ThermoFisher SCIENTIFIC

The role of Spectroscopic PAT in CM

An independent measurement of the chemical properties of the stream (e.g. concentration)

1. Ability to monitor mixing dynamics in real time – a critical tool for developing products/processes
2. Ability to detect upset conditions within the process, such as [illegible]
3. Can potentially be [illegible] release

Critical in development, but not necessary in manufacturing when the process is always running to maintain a target

Important risk screening tool when [illegible]dying how materials interact with the process [illegible] be needed if process can be demonstrated to run without such [illegible]n).

The economic value of this is yet to be determined. If resources needed to develop and maintain spectroscopic methods are high, it may be more viable to continue standard release testing practices

Take Home Message:
The primary value of Spectroscopic PAT is for development of new processes

19

ThermoFisher SCIENTIFIC

The Spectroscopic PAT Challenge

How broad is the technology selection question

- Each product comprised of 3-12 individual entities
- 10s of different materials may be used between different products (e.g. lactose and MCC)
- Different materials often come with a wide variety of sub types (e.g. micronized, granulated, spray dried)
- Concentration of the ingredient of primary interest may vary from fractions of a percent to almost 100%
- For a real-time measurement, the spectroscopic instrument needs to be integrated into the process – sample presentation to the probe can have a significant effect.

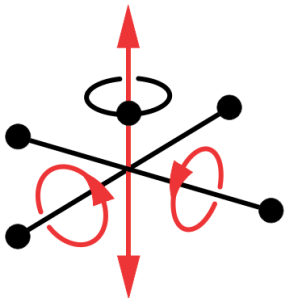

20

ThermoFisher SCIENTIFIC

The Spectroscopic PAT Challenge

How broad is the technology selection question

- Each product comprised of 3-12 individual entities
- 10s of different materials may be used between different products (e.g. lactose and MCC)
- Different materials often come with a wide variety of sub types (e.g. micronized, granulated, spray dried)
- Concentration of the ingredient of primary interest may vary from fractions of a percent to almost 100 %
- For a real-time measurement, the spectroscopic instrument needs to be integrated into the process – sample presentation to the probe can have a significant effect.

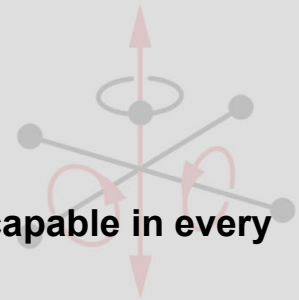

Take Home Message:

There is no 1 size fits all probe which will be capable in every situation.

21

ThermoFisher SCIENTIFIC

Business requirements for a data management system

Data Management System

The combination of hardware and software which is responsible to take multivariate measurements, such as Spectroscopic PAT measurements, and convert it into something which can be acted on by a industrial control system (DCS, PLC, SCADA)

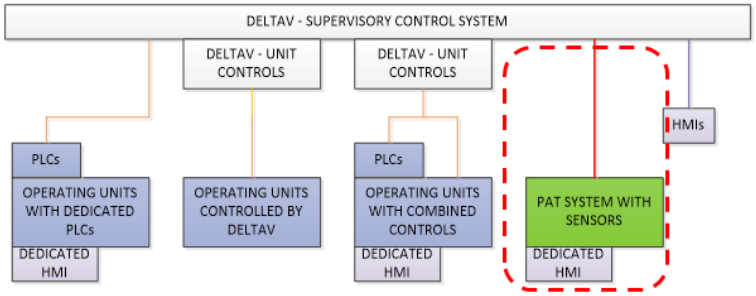

22

ThermoFisher SCIENTIFIC

Business requirements for a data management system

Data Management System (requirements)

- Ability to integrate all critical functionality of instrument into the system
  1. Start/Stop the probe
  2. Request internal reference checks (if applicable)
  3. Communicate alarm information to control system
- Manage critical data (e.g. raw spectra)
  1. Maintain audit trail
  2. Provide pathway for deletion or archival of old data
- All of this needs to be qualified within a GMP environment

Business requirements for a data management system

Data Management System (requirements)

- Ability to (optionally) implement a Spectroscopic PAT method WITHOUT having it integrated into the system

Why?

- The majority of the value of PAT is in development
- It is highly likely that an application will come up which does not fit your in-house technologies capability

Business requirements for a data management system

How can this be achieved?

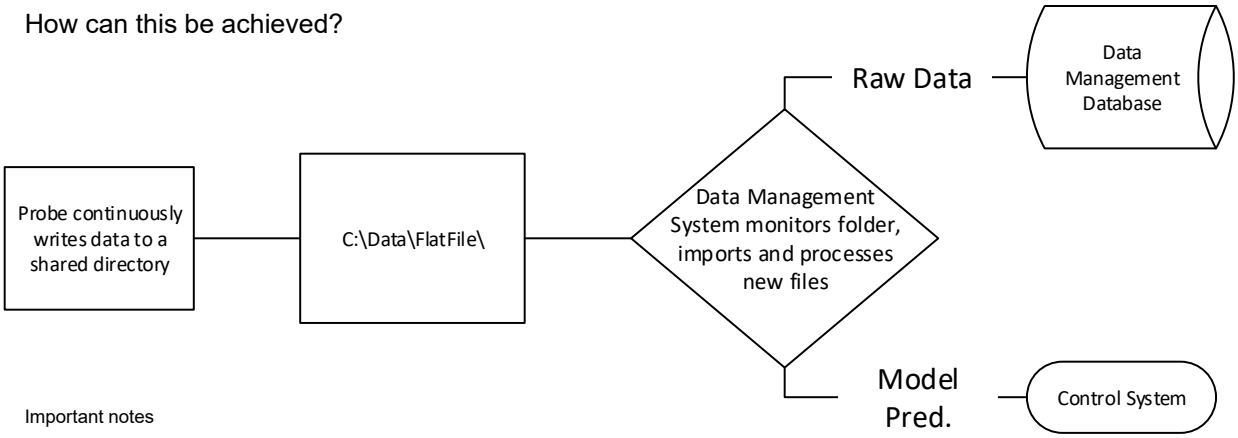

Important notes

- The instruments need to be manually configured and run
- This will require a paper system to track actions
- Limits can still be programed in our the control system side, but status bits become more challenging

ThermoFisher SCIENTIFIC

Business requirements for a data management system

Benefits of this requirement:

- Ability to test spectroscopy methods capability in days/weeks
- Many standard flat file formats already exist
- Instruments can be evaluated through a rental or demo agreement with many vendors
- An intensive, but agile paper process can be used to enable the development of a rapid GMP state for development
- Offers a pathway to do preliminary development work while maintaining an alternative pathway for long term integration for manufacturing if necessary

ThermoFisher SCIENTIFIC

Final Words and Questions

1. There is often some friction between manufacturing and development environments
2. The need to rapidly innovate in development is difficult in a highly automated GMP environment
3. Properly automated processes are a business key for continuous manufacturing
4. I believe business requirements for data management systems need to be developed for both the high paced development environment, as well as the highly automated manufacturing environment

ThermoFisher SCIENTIFIC